RoHS	REV	DATE	ECN NO.	DESCRIPTION	DRAWN	CHECKED	APPROVED
	A0	2024.10.08	N/A	FIRST EDITION	KD	–	FY
	A1	2024.10.08	N/A	UPDATE IL		–	

NOTES:

1.MATERIALS AND PLATING:

1.1 SMP JACK(FEMALE):

1.1.1 BODY: BRASS, GOLD PLATED.

1.1.2 CONTACT PIN: Be–Cu, GOLD PLATED.

1.1.3 INSULATOR: PTFE.

1.2 SMA PLUG(MALE):

1.2.1 BODY: BRASS, GOLD PLATED.

1.2.2 CONTACT PIN: BRASS, GOLD PLATED.

1.2.3 INSULATOR: PTFE.

1.3 CABLE: FORMABLE .086"_ RG405 CABLE (BLUE).

2.ELECTRICAL CHARACTERISTICS:

2.1 IMPEDANCE: 50 OHMS.

2.2 FREQUENCY RANGE: 0 ~ 6 GHz.

2.3 VSWR: <1.30

2.4 IL: <0.59 dB(0 ~ 5.7 GHz).
<0.61 dB(0 ~ 6 GHz). A1

2.5 VOLTAGE RATING: <70 V.

2.6 DIELECTRIC WITHSTANDING VOLTAGE: >200 V

3.MECHANICAL CHARACTERISTICS:

3.1 MATING DURABILITY: >500 CYCLES.

4.ENVIRONMENTAL CHARACTERISTICS:

4.1 TEMPERATURE RANGE: –40~+85 ℃.

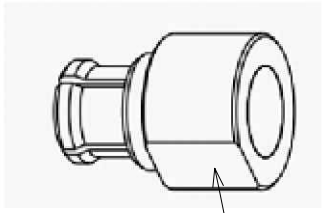

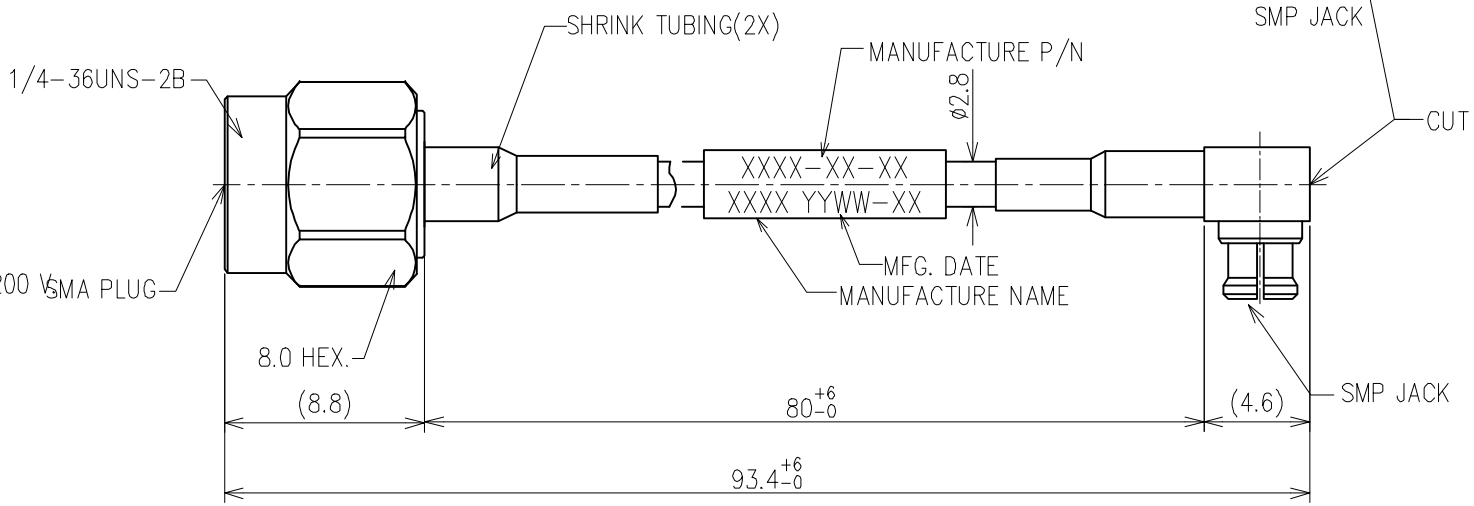

VIEW DIRECTION		UNFILLED TOLERANCE	
		X.	±0.35
SCALE	4:1	X.X	±0.25
UNITS	mm	X.XX	±0.13
SHEET NO.	1 of 1	X.XXX	±0.05
SHEET SIZE	A4	ANGLES	±3°

QTEK

PART NO. CCD6126D

CUSTOMER OUTLINE DRAWING